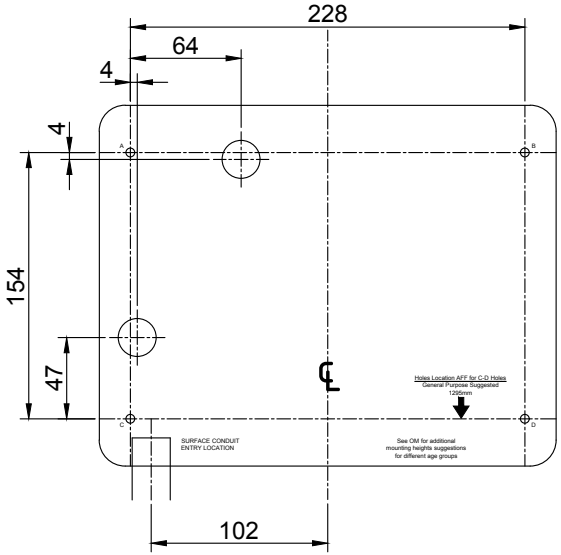

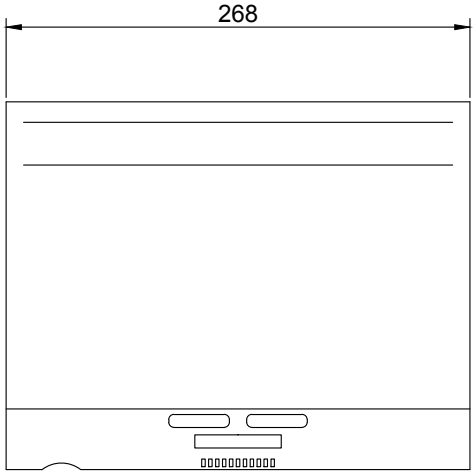

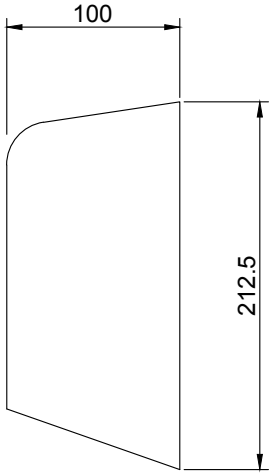

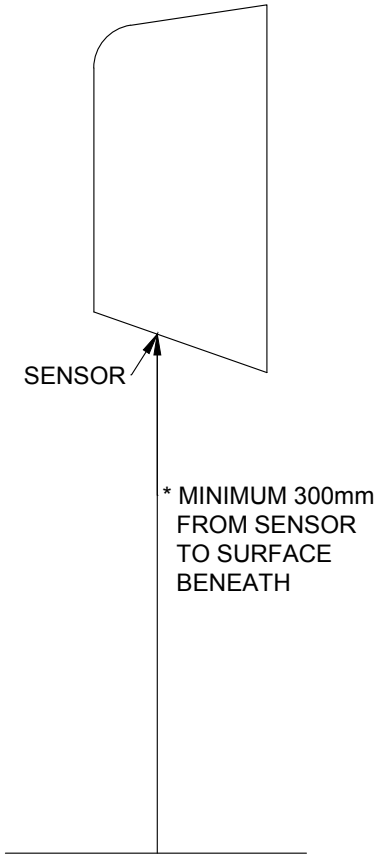

* PLEASE NOTE in certain circumstances less than 300mm is possible but we recommend a mock-up be created to test it in any specific situations to ensure less than 300mm does not cause any issues.

DOLPHIN SOLUTIONS LIMITED
DOLPHIN VELOCITY
SLIMLINE ECO HAND DRYER
BC2005

DOLPHIN